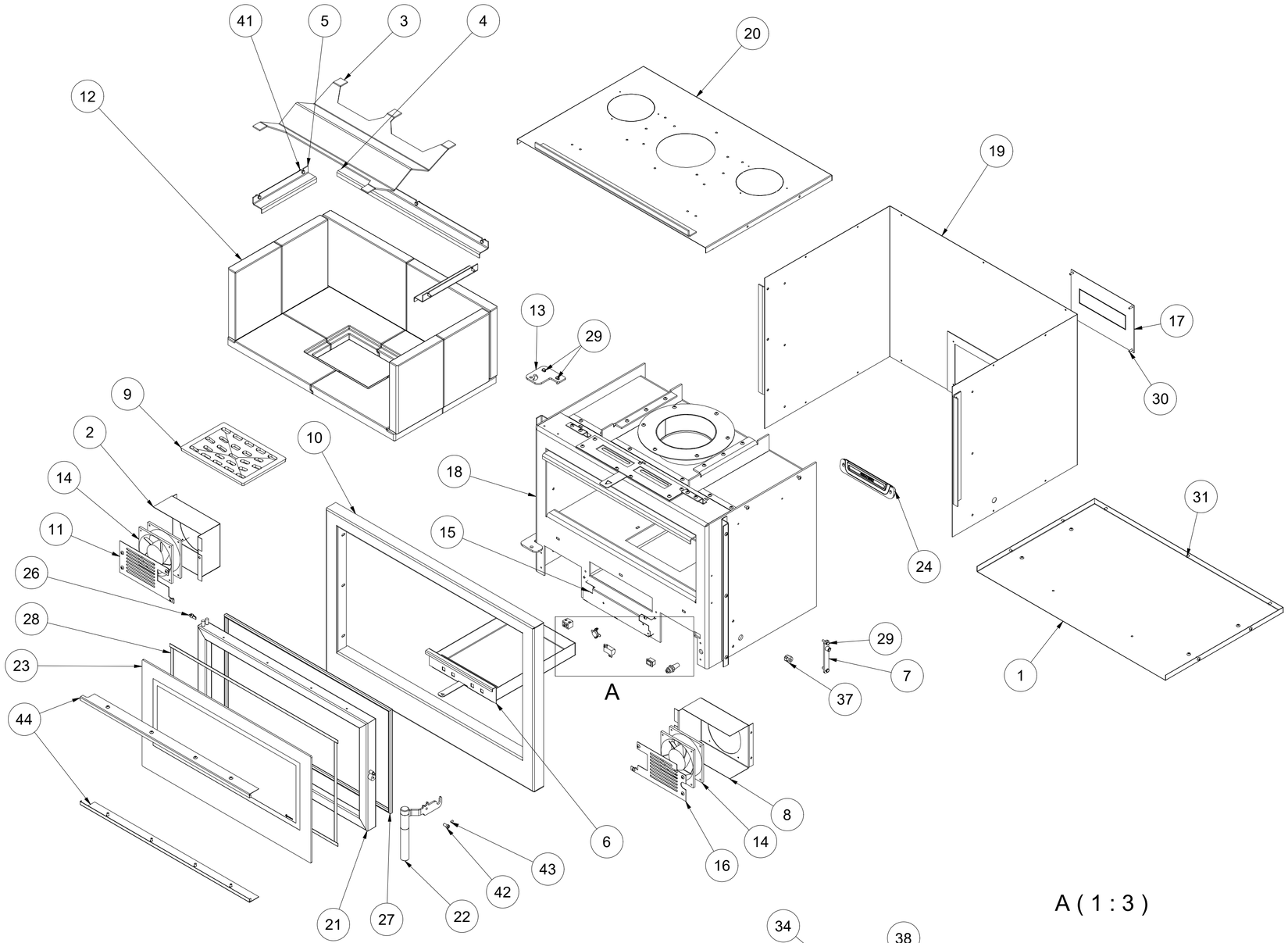

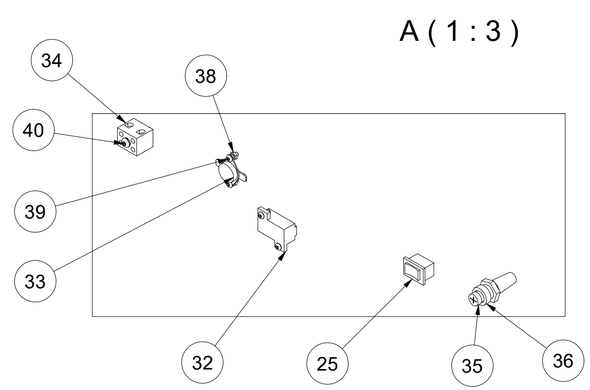

Cassette inserts
FRAM K/80